FT-10 TRAILER • FC-67L CRANE • FG-20 GRAPPLE

Complete Forestry Solution

FORESTER
FORESTRY EQUIPMENT

FORESTER

forester-crane.com

Forged by the North. Easy to Service. Hard to Stop.

+372 5555 7000

Estonia, EU

info@forester.ee

Facebook

YouTube

LinkedIn

FT-10 TRAILER • FC-67L CRANE • FG-20 GRAPPLE

Complete Forestry Solution

FORESTER
FORESTRY EQUIPMENT

Everything you need for professional timber handling.
From Loading to Transport.
One Complete System.

FC-67L **FORESTRY CRANE**

6.70 m

MAXIMUM OUTREACH

Lightweight and reliable.

FG-20
LOG GRAPPLE
0.20 m²
gripping area

For logs and timber bundles.

FT-10 **FORESTRY TRAILER**

10000 kg

LOAD CAPACITY

Strong, compact and extendable.

FORESTER

forester-crane.com

Forged by the North. Easy to Service. Hard to Stop.

+372 5555 7000
Estonia, EU

info@forester.ee
Facebook

YouTube
LinkedIn

FT-10 Forestry Trailer

FORESTER
FORESTRY EQUIPMENT

TECHNICAL DATA

Specification	*FT-10*
Load capacity	10000 kg
Loading area	2.3 m²
Loading area length	4300 / 5275 mm
Total length	6260 / 7170 mm
Overall width	2150 mm
Ground clearance	540 mm
Tyre size	400/60-15.5 OR 500/50-17
Frame section	160 x 160 x 8 mm
Axle section	70 x 70 mm
Number of stake pairs	4/5
Support legs	YES
Frame extension	OPTIONAL
Braking system	Hydraulic OR pneumatic

Dimensions are shown with the frame retracted /extended.

DIMENSION DRAWING

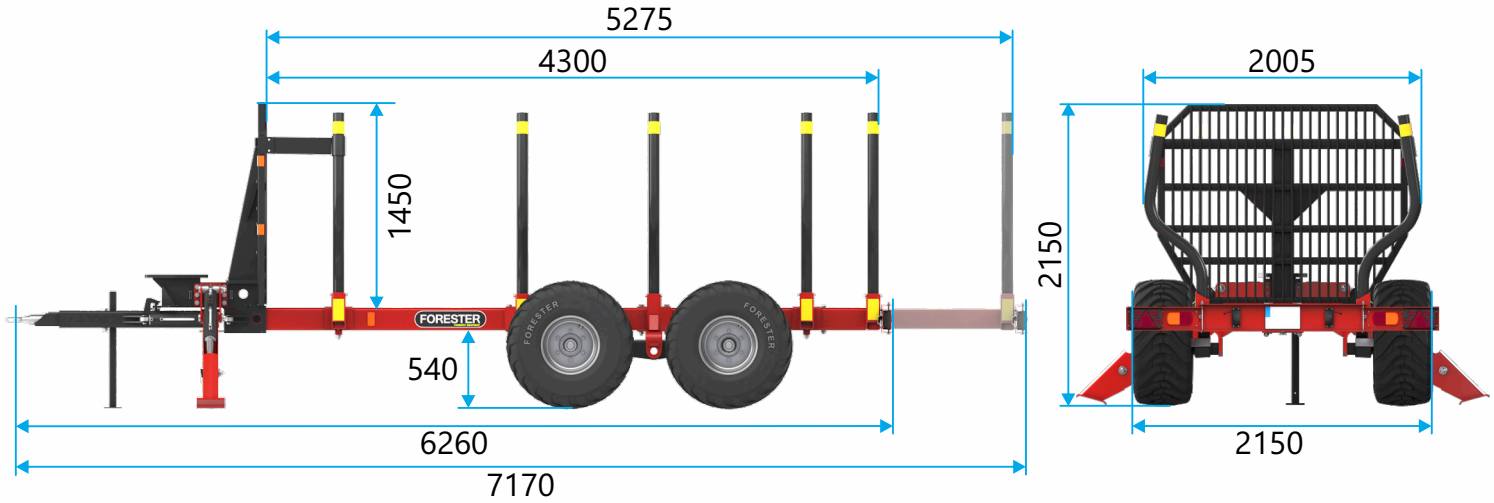

RECOMMENDED WITH

Cranes	FC-53 / FC-67L / FC-67

Our trailers are designed for transporting large volumes of timber and other loads across forested and off-road terrain. The FT-10 combines a 10000 kg load capacity with compact dimensions. Support legs create a secure working base during loading and unloading.

Created and manufactured in Estonia using high-strength Swedish Strenx® steel for an efficient balance of strength, durability and weight.

FORESTER
FORESTRY EQUIPMENT
forester-crane.com
Forged by the North. Easy to Service. Hard to Stop.

+372 5555 7000
Estonia, EU
info@forester.ee
Facebook
YouTube
LinkedIn

FC-67L Forestry Crane

FORESTER
FORESTRY EQUIPMENT

TECHNICAL DATA

Specification	*FC-67L*
Capacity at maximum outreach	500 kg
Maximum outreach	6685 mm
Telescopic extension	1250 mm
Gross lifting torque	52 kNm
Slewing torque	11,1 kNm
Slewing angle	360°
Slewing cylinders	4
Operating pressure	175 bar
Number of booms	2
Crane weight	600 kg

DIMENSION DRAWING

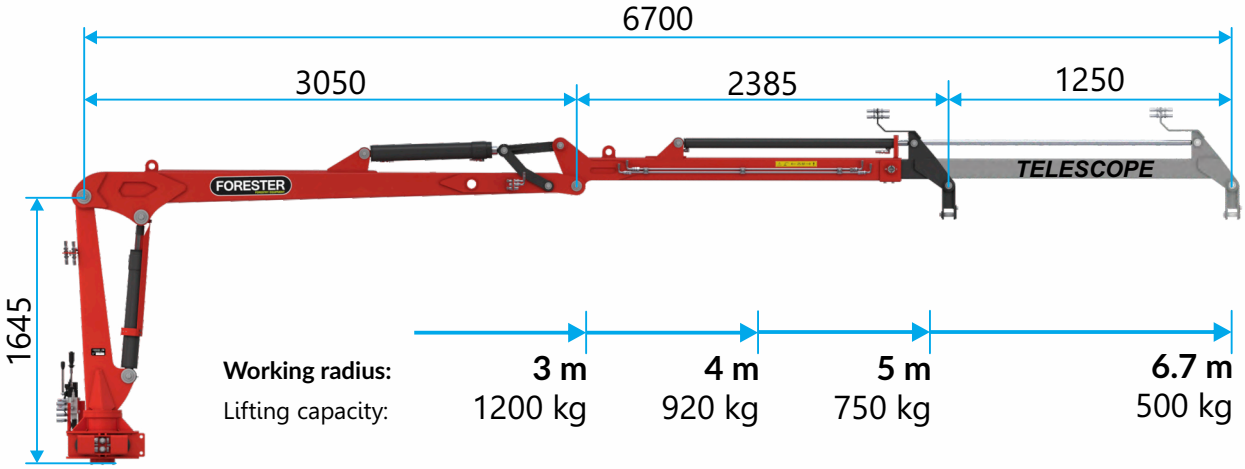

Working radius:	3 m	4 m	5 m	6.7 m
Lifting capacity:	1200 kg	920 kg	750 kg	500 kg

RECOMMENDED WITH

Rotators	FHR 3L /FHR 4.5LH
Grapples	FG-20
Trailers	FT-7 / FT-7AD / FT-8 / FT-9 FT-10 / FT-10D / FT-12

Designed for professional timber loading, the FC-67L combines a 6.70 m maximum outreach and 500 kg lifting capacity at full reach with a crane weight of only 600 kg.
Its telescopic boom, 360° slewing system and protected hydraulics provide efficient, controlled operation in everyday forestry work.

FORESTER
forester-crane.com
Forged by the North. Easy to Service. Hard to Stop.
+372 5555 7000
Estonia, EU
info@forester.ee
Facebook
YouTube
LinkedIn

FG-20 Log Grapple

FORESTER
FORESTRY EQUIPMENT

0.20 m² GRIPPING AREA
Provides practical capacity for handling individual logs and timber bundles.

1170 mm MAXIMUM OPENING
A wide opening supports efficient collection, loading and stacking of timber.

75 kg GRAPPLE WEIGHT
A compact 75 kg structure provides an efficient balance of gripping capacity and weight.

SERVICE-FRIENDLY DESIGN
Straightforward access simplifies routine maintenance and local repairs.

TECHNICAL DATA	
Specification	***FG-20***
Gripping area	0.20 m²
Maximum opening	1170 mm
Height when closed	432 mm
Working pressure	175 bar
Grapple weight	75 kg
Maximum permissible load	1100 kg
Height when open	625 mm
Width large claw	348 mm
Width small claw	274 mm
House width	360 mm
Min gripping diameter	95 mm
RECOMMENDED WITH	
Rotators	FHR 3L /FHR 4.5LH
Cranes	FC-53/FC-67/FC-67L/FC-7000S/FC-85

DIMENSION DRAWING

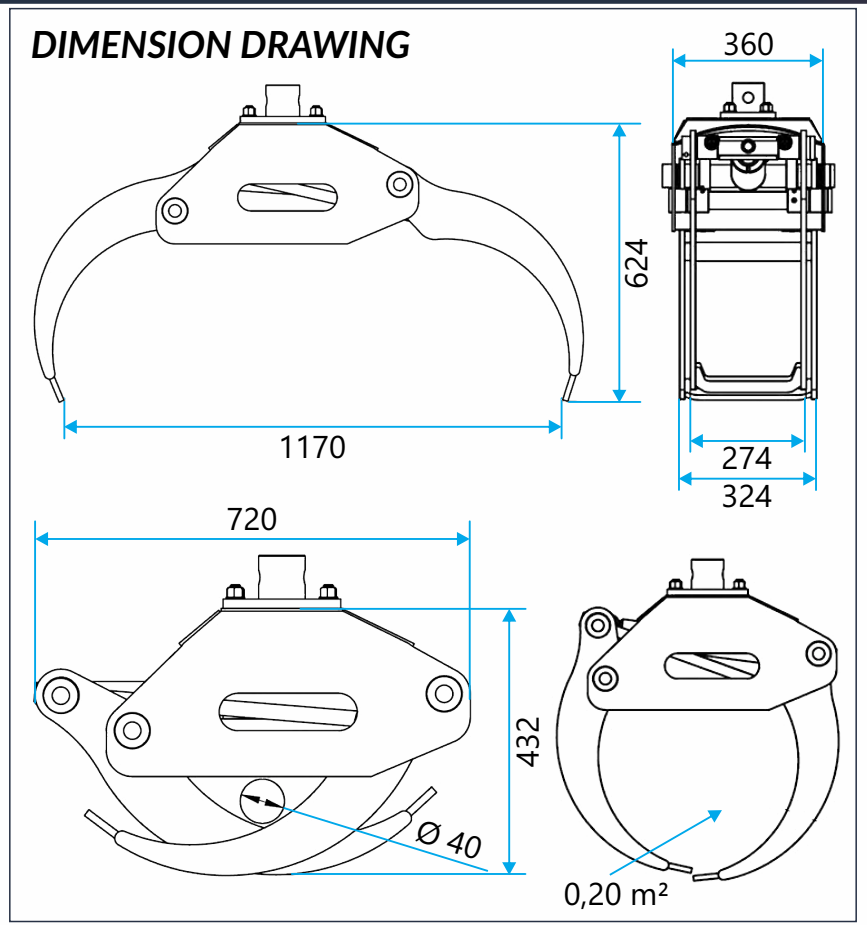

PRECISION METALWORKING
CNC cutting, bending, turning and milling support the accurate and consistent production of key components. High-strength Strenx® steel is used where strength and reduced weight matter most.

QUALITY CONTROL
Critical dimensions, assemblies and finished equipment are checked throughout production before delivery.